Beveled Flange Adapters

SIZE	SDR 11 With Extended Hub		
	OD-3	T-1	T-2
2	2.25	0.22	0.50
3	3.25	0.32	0.70
4	4.25	0.41	1.12
6	6.25	0.60	1.34
8	8.00	0.78	1.82
10	10.00	0.98	2.24
12	12.00	1.16	2.55
14	13.00	1.27	2.85
16	15.00	1.46	3.25
18	17.25	1.64	4.11
20	19.00	1.82	3.88
22	21.27	2.00	4.19
24	23.25	2.18	4.61

SIZE	OD-1	OD-2	L	R
2	2.38	4.00	6.00	0.25
3	3.50	5.00	6.00	0.25
4	4.50	6.60	6.80	0.38
6	6.63	8.50	8.00	0.38
8	8.63	10.60	9.00	0.38
10	10.75	12.80	10.75	0.38
12	12.75	15.25	11.00	0.38
14	14.00	17.50	11.00	0.50
16	16.00	20.00	12.00	0.50
18	18.00	21.10	12.00	0.50
20	20.00	23.50	12.75	0.50
22	22.00	25.60	13.00	0.50
24	24.00	27.90	14.00	0.50

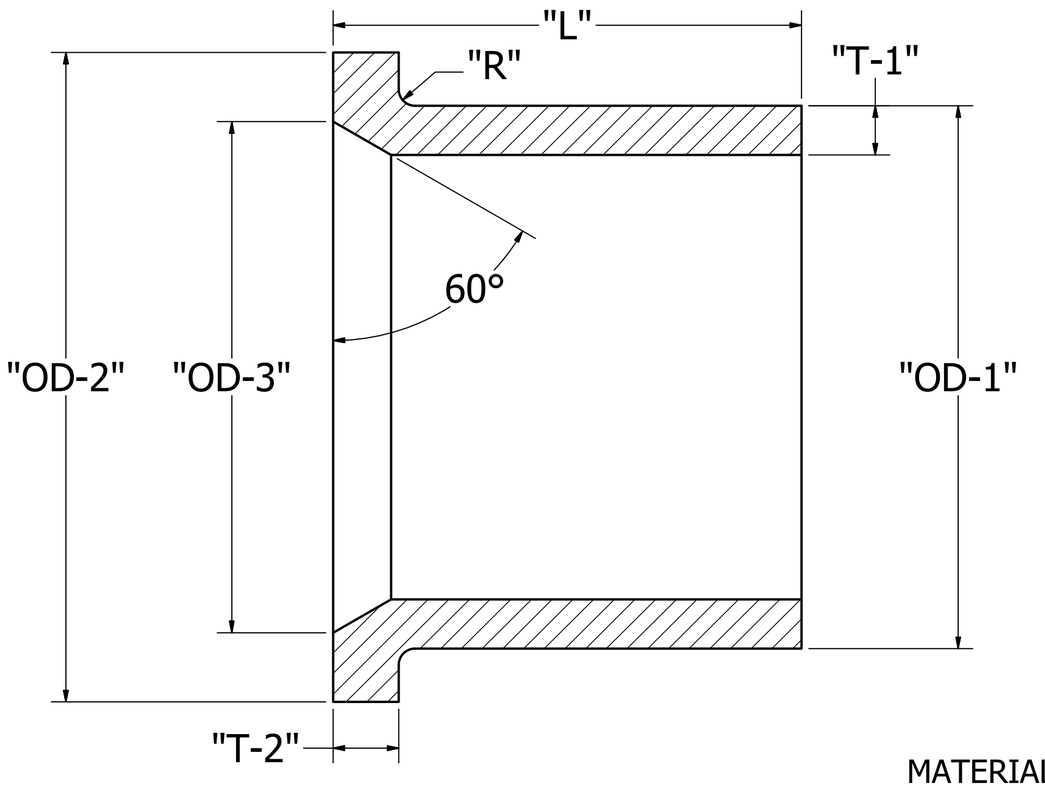



MATERIAL: HDPE-PE4710/3608/100

UNLESS OTHERWISE NOTED:
ALL DIMENSIONS ARE IN INCHES

IMPROVED PIPING PRODUCTS, INC.

TITLE

BEVELED FLANGE ADAPTER SUBMITTAL
IPS SDR11 60° PC200