REVISION HISTORY		
REV	DESCRIPTION	CREATION DATE
1	VALID- ORIGINAL DWG	9/9/2021
2	ADDED 6" AND 8"	8/22/2022
3	INCLUDED NSF STAMP AND NOTE	9/24/2024

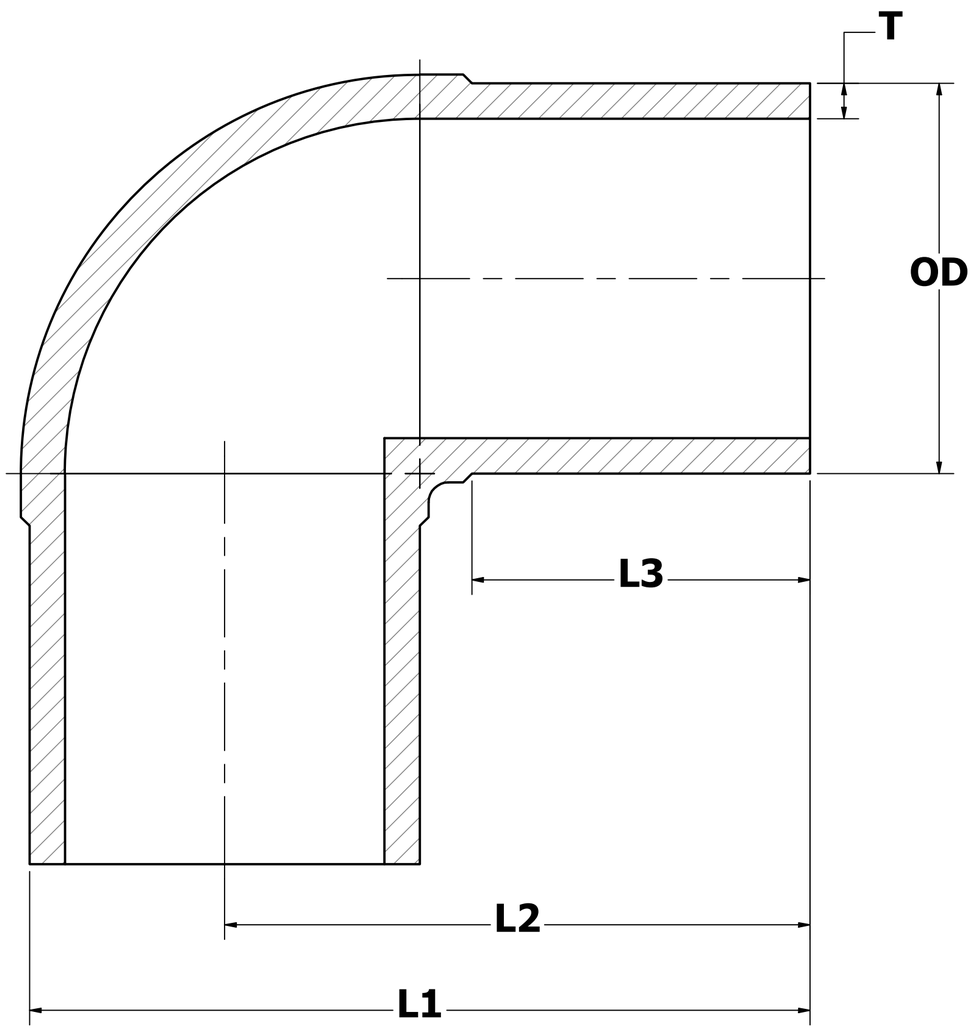

SECTION VIEW

SIZE	OD	L1	L2	L3
2	2.38	6.26	4.96	3.00
3	3.50	7.38	5.53	3.25
4	4.50	9.10	6.75	3.90
6	6.63	12.50	9.10	4.90
8	8.63	16.40	11.95	6.00

SIZE	WALL THICKENESS	
	11	17
	T	T
2	0.216	0.140
3	0.318	0.206
4	0.409	0.265
6	0.603	0.390
8	0.785	0.508



Fittings are marked to the standards and certifications of which they were produced.
Material: HDPE-PE4710/PE100 CELL CLASS:PE445574C (ASTMD3350)
Meets Requirements: AWWA C901/C906 ; ASTM D2513 ; ASTM D3261

Certified to NSF/ANSI/CAN 61-G

UNLESS OTHERWISE NOTED:
ALL DIMENSIONS IN INCHES

IMPROVED PIPING PRODUCTS, INC.

TITLE

90° ELBOWS

MAT'L: HDPE-PE4710/PE100