Material: HDPE - PE4710/PE100

REVISION HISTORY		
REV	DESCRIPTION	DATE
1	VALID - ORIGINAL DWG	05/20/11
2	UPDATE TITLE BLOCK	9/16/2013
3	ADD OPTIONAL INSERTS	9/02/2020
4	REVISED SPECIFICATION TABLE	9/19/2023
5	ADDED REQUIREMENT NOTES	07/16/2024
6	INCLUDED ADAPTERS FOR 18"AND 20"	9/25/2024

Wall Thickness (T-1) and Internal Diameter (ID)

Size	SDRs															
	9		11		13.5		15.5		17		21*		26*		32.5*	
	T-1	ID	T-1	ID	T-1	ID	T-1	ID	T-1	ID	T-1	ID	T-1	ID	T-1	ID
18"			1.773	15.954	1.444	16.612	1.258	16.984	1.147	17.206	0.929	17.642	0.750	18.000	0.600	18.300
20"			1.964	17.672	1.600	18.400	1.394	18.812	1.271	19.058	1.029	19.542	0.831	19.938	0.665	20.270
24"	2.867	20.067	2.345	21.109	1.911	21.978	1.665	22.471	1.518	22.765	1.229	22.765	0.992	22.765	0.794	22.765
30"	3.556	24.889	2.909	26.182	2.370	27.259	2.065	27.871	1.882	28.235	1.524	28.235	1.231	28.235	0.985	28.235
36"	4.256	29.789	3.482	31.336	2.837	32.626	2.471	33.358	2.253	33.794	1.824	33.794	1.473	33.794	1.178	33.794
42"			4.045	36.409	3.296	37.907	2.871	38.758	2.618	39.265	2.119	39.265	1.712	39.265	1.369	39.265
48"			4.618	41.564	3.763	43.274	3.277	44.245	2.988	44.824	2.419	44.824	1.954	44.824	1.563	44.824

* FROM SDR21 - SDR32.5 (WILL BE TAPER BORE FROM SDR17)

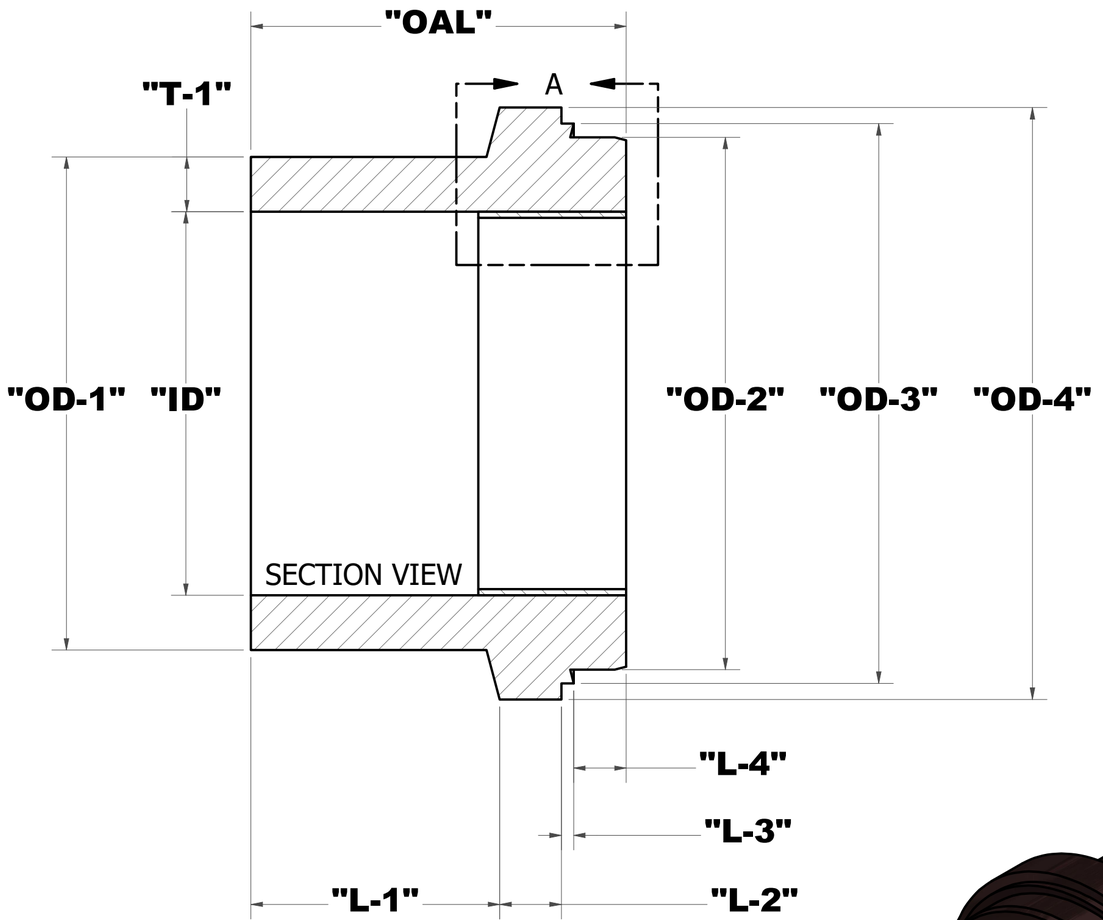

Dimensions

Size	OD-1	OD-2	OD-3	OD-4	OAL	L-1	L-2	L-3	L-4
18"	19.500	19.500	20.600	22.000	15.220	10.095	2.500	0.500	2.125
20"	21.600	21.600	22.700	24.000	15.220	10.095	2.500	0.500	2.125
24"	25.800	25.800	26.900	28.000	15.220	10.095	2.500	0.500	2.125
30"	32.000	32.000	33.290	35.013	19.000	12.500	3.000	1.000	2.500
36"	38.300	38.300	39.590	41.820	19.000	12.500	3.000	1.000	2.500
42"	44.500	44.500	45.790	47.500	21.000	14.500	3.000	1.000	2.500
48"	50.800	50.800	52.090	54.090	21.000	14.500	3.000	1.000	2.500

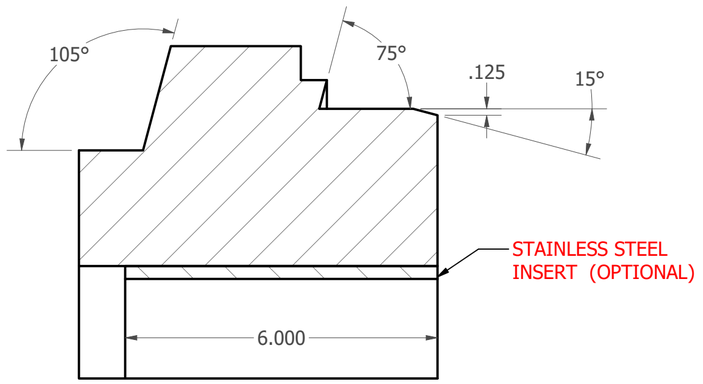

DETAIL A

Stainless steel inserts are optional and must be stated at the time of quote request. Ongoing engineering design efforts may affect the technical information listed in our publications.

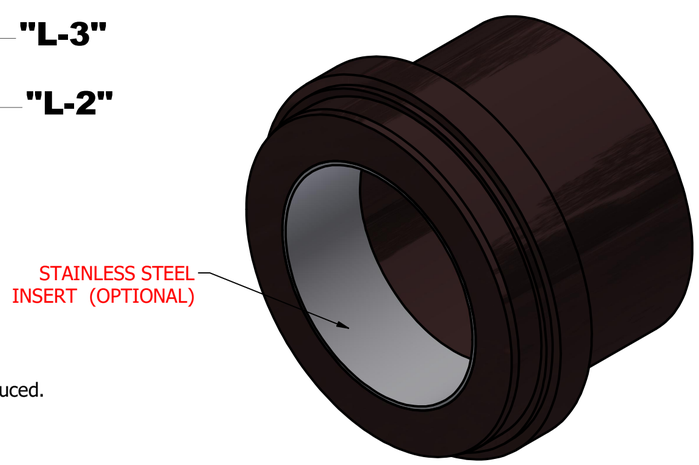

Fittings are marked to the standards and certifications of which they were produced.
Material:HDPE-PE4710/PE100 CELL CLASS:PE445574C (ASTMD3350)
Meets Dimensional Requirements:ASTM D3261; AWWA C906

IMPROVED PIPING PRODUCTS, INC.

TITLE

MJ Adapter Submittal - DIPS

UNLESS OTHERWISE NOTED, ALL DIMENSIONS IN INCHES